** 6"x12" W4xW4 WIRE FABRIC REINFORCING SHALL BE PLACED SUCH THAT THE WIRES WITH THE 6" SPACING WILL RUN PARALLEL WITH THE LONGITUDINAL JOINT.

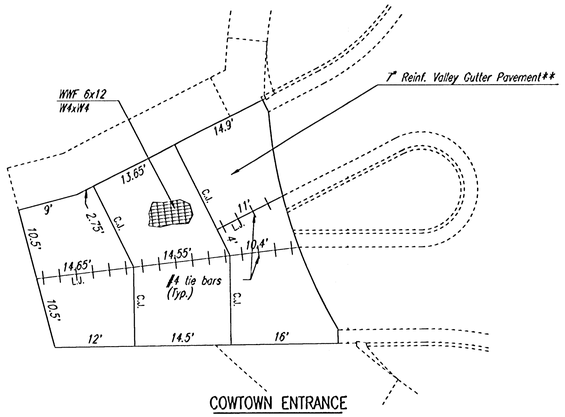

COWTOWN ENTRANCE

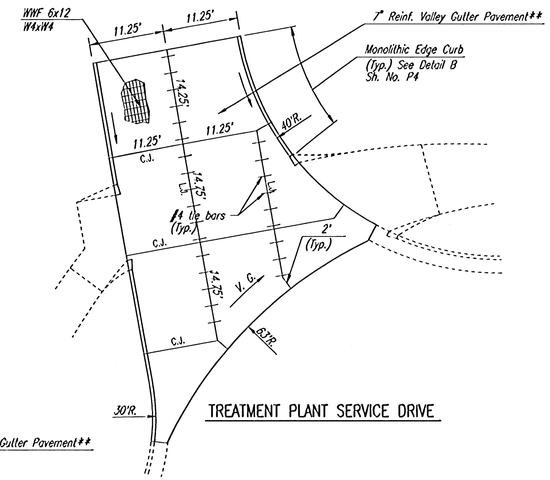

TREATMENT PLANT SERVICE DRIVE

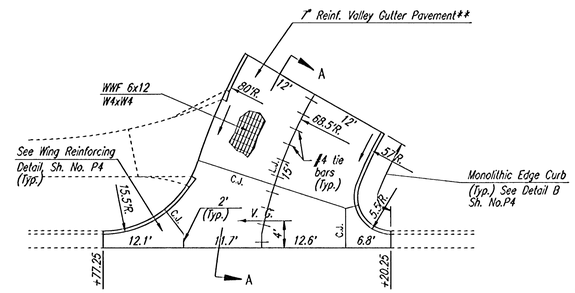

WEST WATER PLANT ENTRANCE

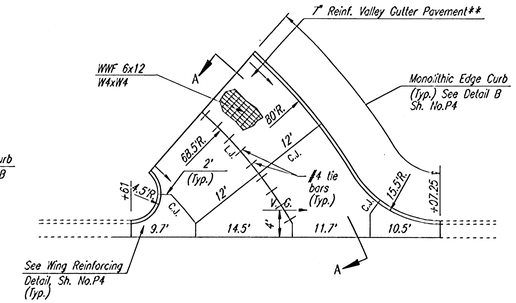

EAST WATER PLANT ENTRANCE

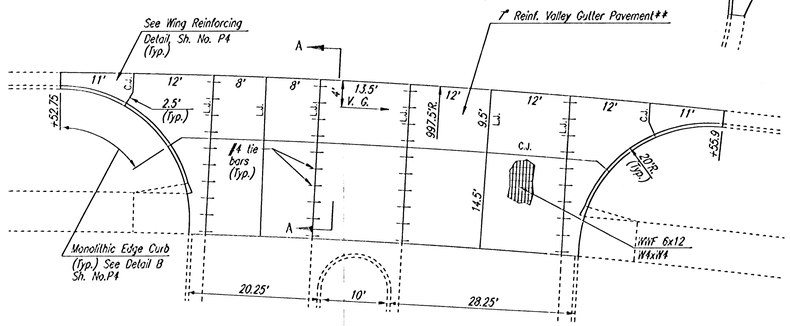

STA. 57+04.24, RT.

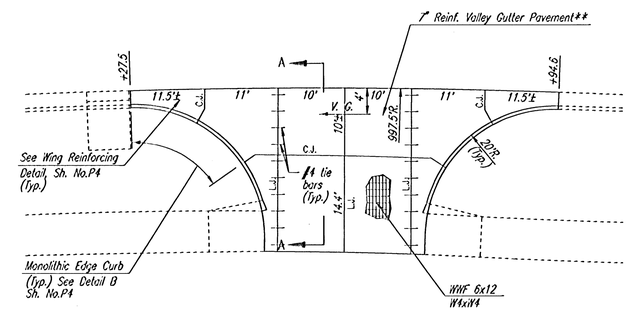

STA. 60+61.31, RT.

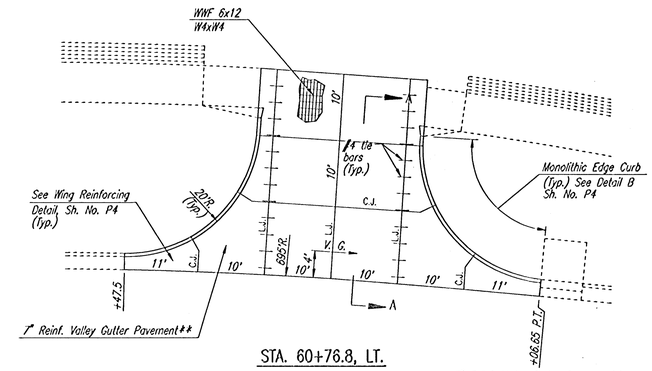

STA. 60+76.8, LT.

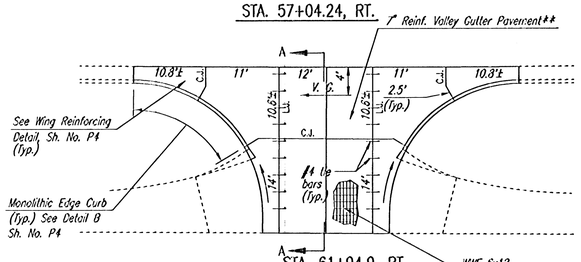

STA. 61+94.9, RT.

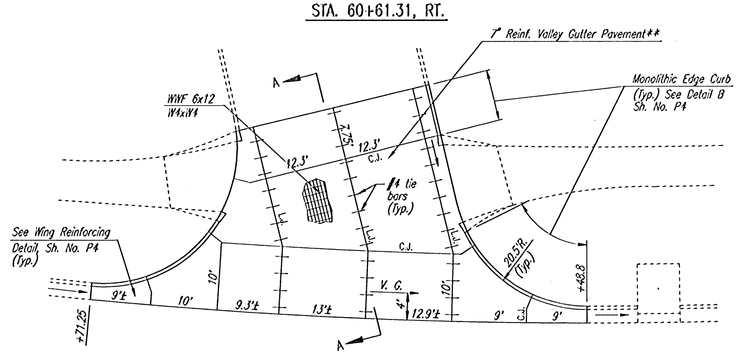

STA. 66+25, LEFT

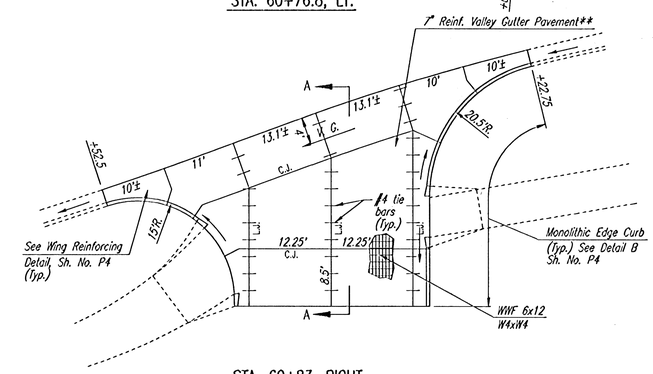

STA. 69+83, RIGHT

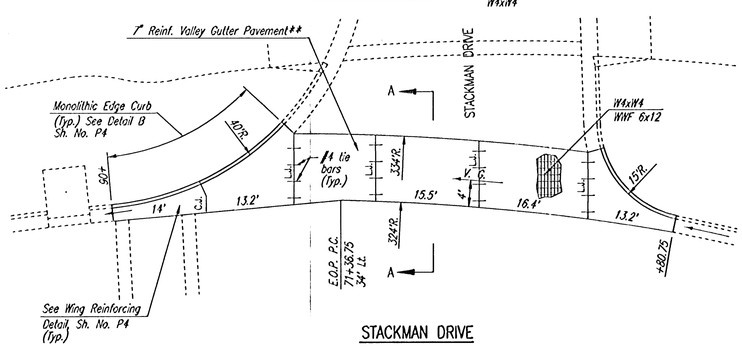

STACKMAN DRIVE

SEE P-4 FOR ADDITIONAL DETAILS

REV.	DATE	DESCRIPTION

HELLMUTH, OBATA & KASSEBAUM, INC.
DALLAS, TEXAS

PROFESSIONAL ENGINEERING CONSULTANTS, P.A.
WICHITA, KANSAS

BRAD J. GOLDBERG
DALLAS, TEXAS

MUSEUM DISTRICT ROADWAY AND PEDESTRIAN IMPROVEMENTS
WICHITA, KANSAS

VALLEY GUTTER DETAILS

PROJECT NO.

SHEET P-3

PLAN		BY	DATE
	SURVEYED		
	PLOTTED		
NOTE BOOK NO.	HORIZ. CHECKED		
	VERT. CHECKED		
	RT. OF WAY CHECKED		

DSNR: DEP OPER: DEP SCALE: 1=10.00
Q:\1999\99773\000\VALGUTDTL 06-01-2001 03:11:48 pm