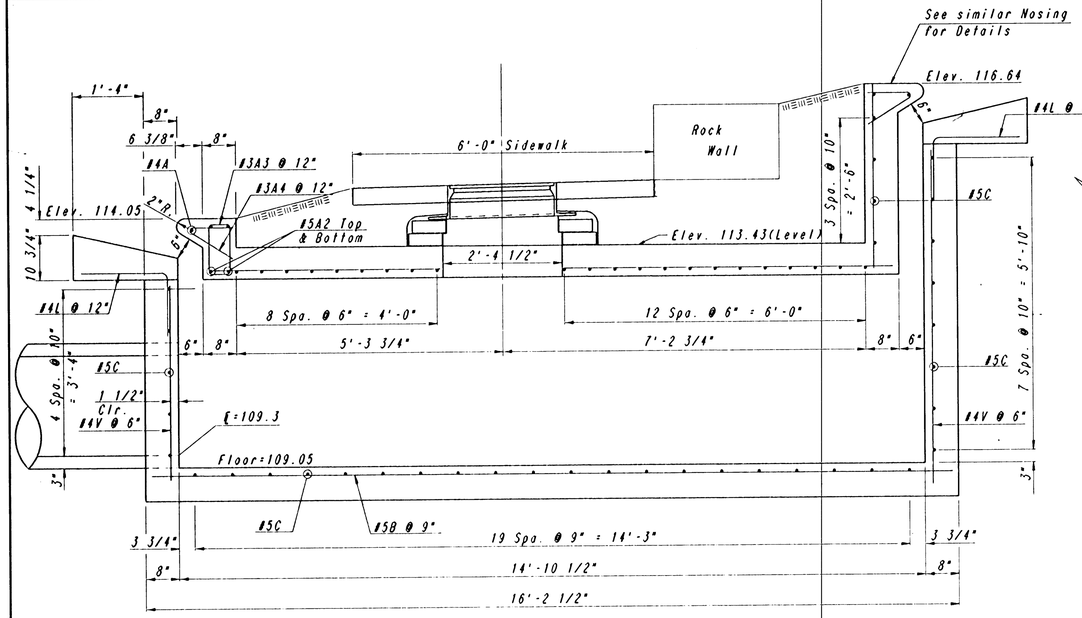

SECTION A-A

Note:
Transition gutter from normal depth of 6" to 9" at inlet in 2'-6" Curb and gutter sections shall be shaped as shown where required by the installation of curb inlets. This work will be subsidiary to other bid items.

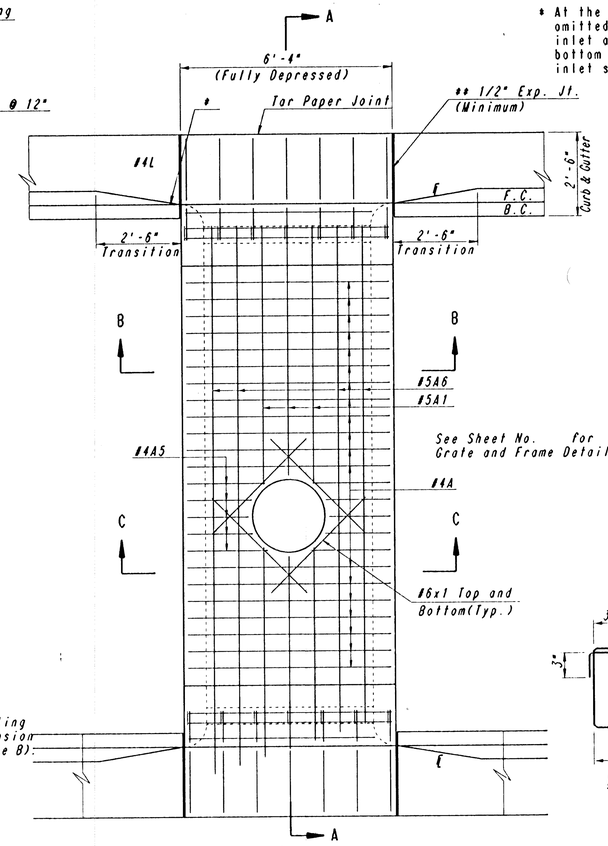

PLAN

* At the contractor's option, gutter may be constructed continuous, L bars omitted, and a 1/2" Expansion joint installed between gutter and face of inlet and between curb and side of inlet with a tar paper joint between bottom of gutter and top of wall. In this method of construction, the inlet shall be completely free of the gutter and curb.

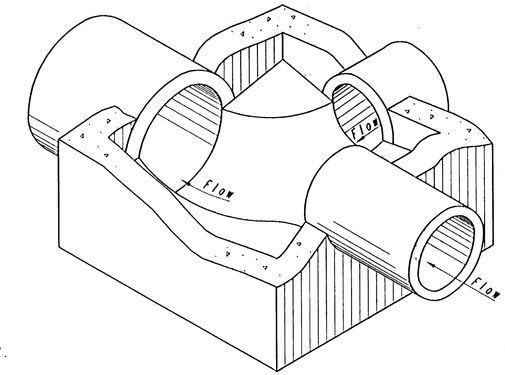

ISOMETRIC VIEW

Floor of Manhole shall be shaped as shown to increase hydraulic efficiency.

Note:
Reinforcing for L Bars is not included in the Reinforcing Steel Quantity and is Subsidiary to other Inlet items.

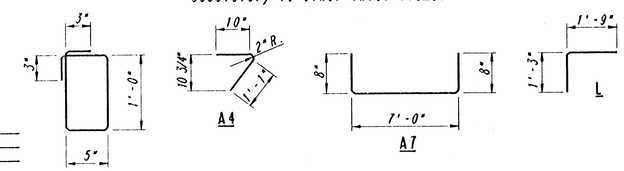

BENDING DIAGRAMS

Dimensions are out to out of bars

* Slope Varies with Distance behind Curb.

** Hot or cold poured joint sealing compound, or premoulded Expansion Joint Filler (Non-extruding, Type B).

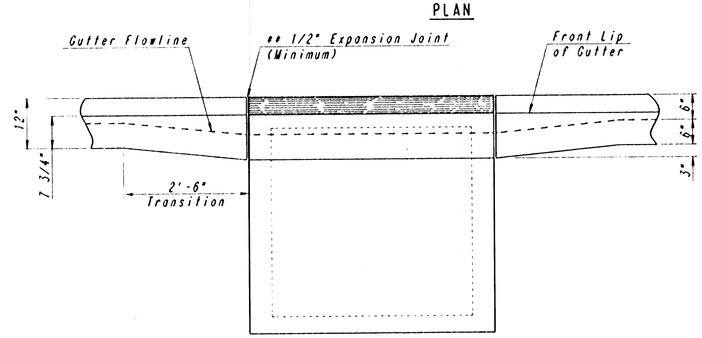

ELEVATION

GENERAL NOTES

Concrete- Bevel all exposed edges with a 3/4" triangular moulding or finish with an approved edging tool. Concrete shall be as per City of Wichita Standard Specifications for concrete paving mix except that it shall have a a minimum 28 day compressive strength of 4000 P.S.I. All pipes shall be flush cut prior to be cast into walls. Reinforcing bars shall be bent or cut around pipes. All bars shall have a minimum clearance of 1 1/2" unless otherwise noted on the plans. All reinforcing shall conform to ASTM- A615 specification grade 60.
In general, pipes will enter and leave manhole at various positions. Where possible bend bars around pipes.
Floor of manhole to be shaped as shown-in isometric view with unreinforced Class "A" Concrete.
Grate opening and steps, where used, shall be placed to afford easy access to top of shaped invert. Reinforcing bars to be adjusted accordingly. See Sheet No. for Inlet Grate and Frame Details and Notes.
No deductions in concrete quantities shall be made for pipe openings or additions to concrete quantities shall be made for shaping floor of manholes.
Steps shall be installed in all storm sewer inlets when specified in the plans or when "H" is equal to or greater than six feet. Steps shall comply with City of Wichita Standard Specifications.

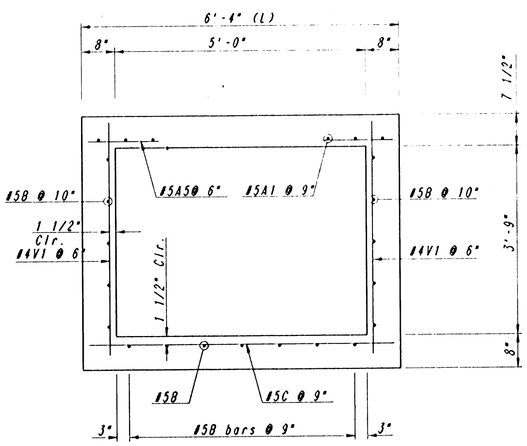

SECTION B-B

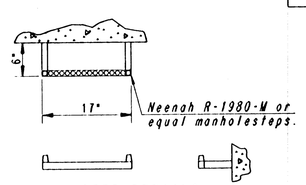

STEP DETAILS

REV.	DATE	DESCRIPTION

HELLMUTH, OBATA & KASSEBAUM, INC.
DALLAS, TEXAS

PROFESSIONAL ENGINEERING CONSULTANTS, P.A.
WICHITA, KANSAS

BRAD J. GOLDBERG
DALLAS, TEXAS

MUSEUM DISTRICT ROADWAY AND PEDESTRIAN IMPROVEMENTS
WICHITA, KANSAS

SPECIAL CURB-AREA INLET AND MANHOLE

PROJECT NO. | 11 JULY 1997 | SHEET U5

DRAWING NAME: 32-92005 MUSEUM INLET
LOCATION: 04 41691
CENTER COORDINATES:
DATE LAST WORKED ON: JAN. 19, 1995
RICHARD SCHLITT