FHWA REG NO.	STATE	PROJECT NO.	YEAR	SHEET NO.	SHEETS
7	KANSAS	472-83448		5	35

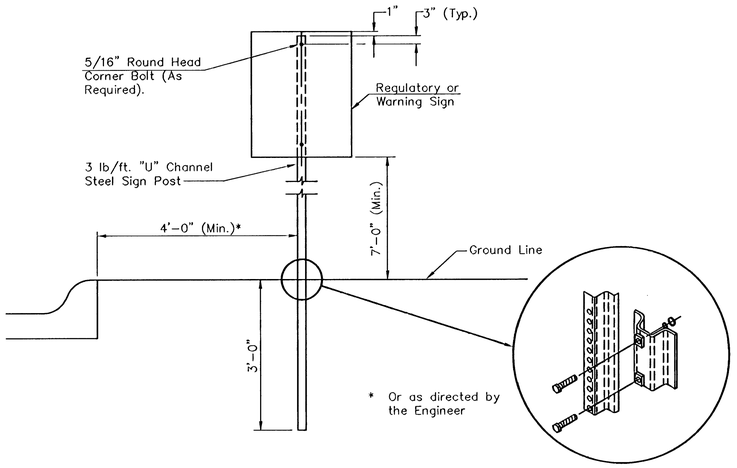

TYPICAL TRAFFIC CONTROL SIGN MOUNTING INSTALLATION

CURB AND GUTTER SECTION

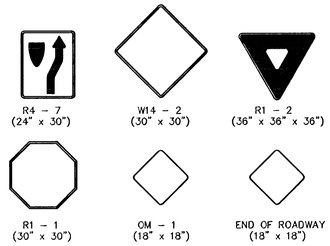

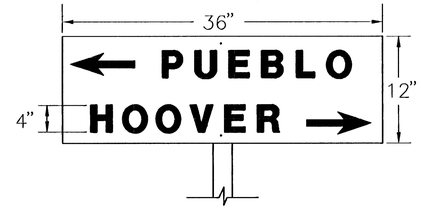

FLAT PLATE STREET NAME SIGN

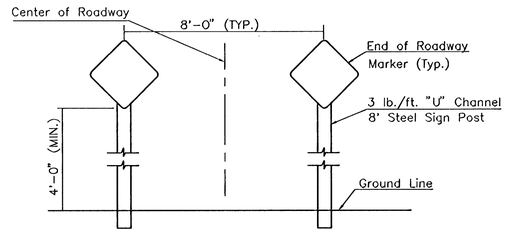

TYPICAL END OF ROADWAY SIGN MOUNTING INSTALLATION

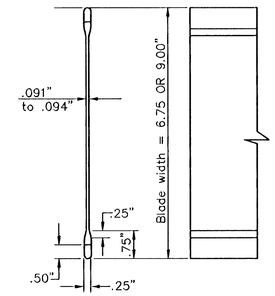

STREET NAME SIGN

BLADE DETAILS

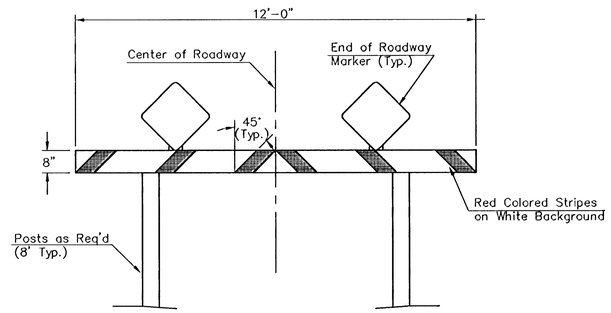

TYPE I BARRICADE DETAIL W/ E.O.R. MARKER

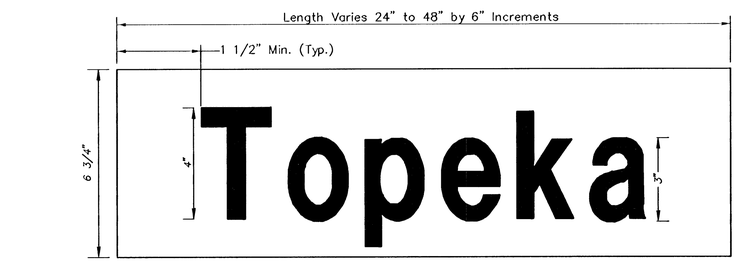

DETAIL A
6 3/4" STANDARD

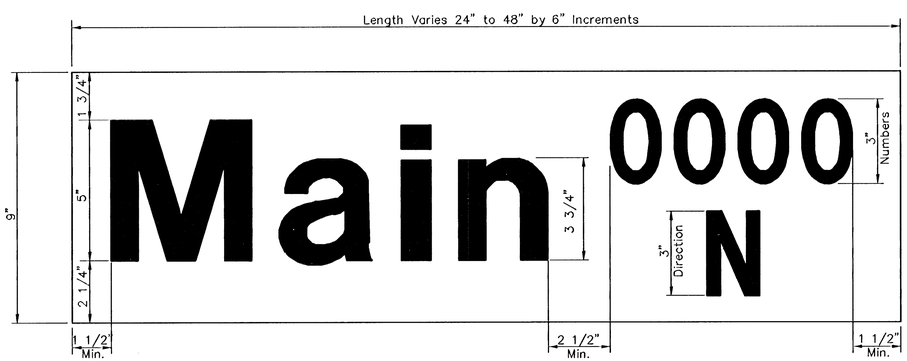

DETAIL B
9" METRO

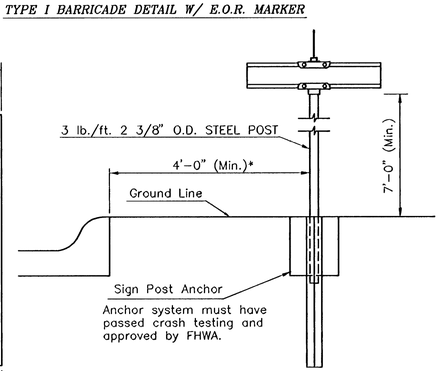

TYPICAL STREET NAME SIGN MOUNTING INSTALLATION

CURB AND GUTTER SECTION

SIGN ASSEMBLY TABLE

STATION	OFFSET	SIGN	QUANTITY*
BEDFORD ST.			
28+93.6	35.6 LT	STREET	1
29+27.7	35.4 LT	STREET	1
33+27.0	22.5 LT	STREET	1
BEDFORD CIR.			
11+35.3	30.0 RT	STREET	1
TOTAL			4

* FOR INFORMATION ONLY

STREET NAME	NO. BLADES REQ'D	
	6 3/4" STD.	9" METRO
Pine Meadow	1	
Bedford	2	
Bedford Cir	2	
Bedford Ct 1102-1142		1
Bedford Ct 1002-1058		1

NOTE: REFERENCES BELOW TO "STANDARD SPECIFICATIONS" DENOTE "STANDARD SPECIFICATION FOR STATE ROAD AND BRIDGE CONSTRUCTION EDITION 1990" BY THE KANSAS DEPARTMENT OF TRANSPROTATION.

1. POST ANCHORS: POSTS SHALL BE ANCHORED WITH A YIELDING BASE POST SUPPORT AS DETAILED.
2. POSTS FOR TRAFFIC CONTROL SIGNS: POSTS SHALL CONFORM TO THE REQUIREMENTS OF SUBSECTION 1620 OF THE STANDARD SPECIFICATIONS EXCEPT THAT ALL POSTS SHALL WEIGH 3 LBS./FOOT MINIMUM.
3. POSTS FOR STREET NAME SIGNS (SNS): POSTS SHALL BE 9 FEET LONG, CONSTRUCTED FROM 2 3/8" O.D. GALVANIZED STEEL PIPE WEIGHING A MINIMUM OF 3 LBS./FOOT. POSTS SHALL BE POSITIONED SO THAT THE BOTTOM BLADE IS 7 FEET ABOVE GRADE.
4. POSTS FOR END OF ROADWAY SIGN TO BE 8' LONG AND INSTALLED A MINIMUM OF 4' FROM ROADWAY TO BOTTOM OF SIGN.
5. SIGN BLANKS FOR TRAFFIC CONTROL SIGNS: SIGN BLANKS SHALL BE FABRICATED FROM 0.080" ALUMINUM ALLOY 6063-T6 CONFORMING TO THE REQUIREMENTS OF SUBSECTION 1626 OF THE STANDARD SPECIFICATIONS.
6. SIGN BLADES FOR STREET NAME SIGNS: EXTRUDED ALUMINUM BLADES SHALL BE ALUMINUM ALLOY CONFORMING TO 6063-T6 OR 5052-H38 (ASTM SPECIFICATION B221, LATEST ISSUE). BLADES SHALL HAVE AN ALODINE OR PHOSPHATE ETCHED FINISH. BLADES SHALL HAVE SQUARE CORNERS AND NO HOLES.

   MINIMUM BLADE LENGTH SHALL BE 24". MAXIMUM BLADE LENGTH SHALL BE 48". LENGTH VARIES BY INCREMENTS OF 6".

   BLADES BEARING THE STREET NAMES SHALL BE FIRMLY ATTACHED TO THE MOUNTING BRACKETS USING ALLEN-TYPE SET SCREWS. THE BLADES SHALL BE ORIENTED PARALLEL TO THE STREET.
7. MOUNTING BRACKETS FOR SIGNS: DIE-CAST ALUMINUM BRACKETS SHALL BE ALUMINUM ALLOY 360 HAVING A TENSILE STRENGTH OF 44,000 PSI. THE BRACKETS SHALL BE SMOOTHLY FINISHED FREE OF PITS, BURRS, AND FLAWS. EACH BRACKET SHALL BE TAPPED AND DRILLED FOR 5/16" ZINC-PLATED ALLEN-TYPE SET SCREWS HAVING SELF-LOCKING SAW-TOOTH ENDS.
8. FASTENERS: ALL STEEL FASTENERS FOR TRAFFIC CONTROL SIGNS SHALL BE GALVANIZED AND SHALL CONFORM TO THE REQUIREMENTS OF SUBSECTION 1614 OF THE STANDARD SPECIFICATIONS.
9. REFLECTIVE SHEETING: REFLECTIVE SHEETING SHALL BE TYPE II - HIGH PERFORMANCE CLASS HA IN ACCORDANCE WITH SUBSECTION 2201 OF THE STANDARD SPECIFICATIONS.
10. PROCESS INK: ALL PROCESS INK SHALL CONFORM TO THE REQUIREMENTS OF SUBSECTION 2202 OF THE STANDARD SPECIFICATIONS.
11. DETAILS: REGULATORY AND WARNING SIGNS SHALL CONFORM TO THE DETAILS IN "STANDARD HIGHWAY SIGNS", FHWA, 1979.
12. DETAILS - SNS: THE REFLECTIVE SHEETING FOR THE 6 3/4" STANDARD SIZE SNS IS TO BE THE HIGHWAY GREEN BACKGOUND WITH SILVER-WHITE #2 COPY WITH 4" UPPER CASE AND LOWER CASE PRIMARY COPY AND SUFFIX COPY. BOTH SERIES "C". FACES TO TRIM TO A 6 1/4". (SEE DETAIL A.)

    THE REFLECTIVE SHEETING FOR THE 9" METRO SIZE SNS IS TO BE THE HIGHWAY GREEN BACKGROUND WITH SILVERWHITE #2 COPY WITH 5" UPPER CASE AND LOWER CASE PRIMARY COPY AND SUFFIX COPY, BOTH SERIES "C". THE CARDINAL DIRECTION CENTERED DIRECTLY BELOW THE BLOCK NUMBER SHALL BE AN UPPER CASE, 4" SERIES "C" LETTER. FACES TO TRIM TO A 8 1/2" WIDTH. (SEE DETAIL B.)

    FOR CUL-DE-SAC STREETS, A 9" METRO SIZE BLADE SHALL BE USED WITH THE HOUSE NUMBERS DISPLAYED BENEATH THE STREET NAME. LETTERING TO BE THE SAME AS FOR THE 6 3/4" SIZE BLADE, EXCEPT THAT THE HOUSE NUMBER INFORMATION SHALL BE 4" SERIES "C".

    SHOP DRAWINGS OF LAYOUT FOR SNS SHALL BE SUBMITTED TO THE TRAFFIC ENGINEERING DIVISION OF THE CITY OF WICHITA FOR APPROVAL PRIOR TO FABRICATION. THE FINISHED SIGNS AS SUPPLILED SHALL BE OF GOOD APPEARANCE, FREE FROM RAGGED EDGES, CRACKS SCALES OR BLISTERS AND SHALL BE CLEAN-CUT. SIGNS SHALL BE PACKED IN SUCH MANNER AS TO PREVENT DAMAGE OR DEFACEMENT DURING SHIPMENT OR STORAGE.
13. PERMANENT TRAFFIC CONTROL AND SNS: PERMANENT TRAFFIC CONTROL AND SNS SHALL BE MEASURED AND PAID FOR AT THE LUMP SUM PRICE FOR SIGNING. THE PAYMENT AS SET FORTH ABOVE SHALL BE CONSIDERED FULL COMPENSATION FOR ALL EXCAVATION, BACKFILLING. POSTS, ANCHORS, FASTENERS, MATERIALS, LABOR, TOOLS AND INCIDENTALS NECESSARY TO COMPLETE THIS WORK.

H:\CIVIL\00062\DWG\SAN\00062_BK

SIGNING DETAILS

SCALE: NONE | APPROVED BY | DATE: JUNE '93

DRAWN BY: TM | REVISED: JUNE '97

CITY OF WICHITA

DEPARTMENT OF PUBLIC WORKS

TRAFFIC ENGINEERING SECTION

D-5

Details> snsdtls 4/13/99

H:\CIVIL\01077\DWG\PAV\2NDADD\PH1\01077ED3.DWG Tue Mar 05 17:39:49 2002