PROJECT NO.	SHEET NO.	TOTAL SHEETS
472-83468	24	55

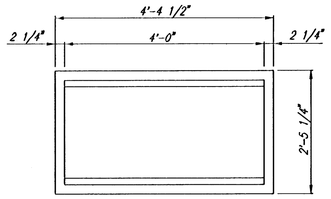

FRAME DETAIL
(Wt.=460 lbs.)

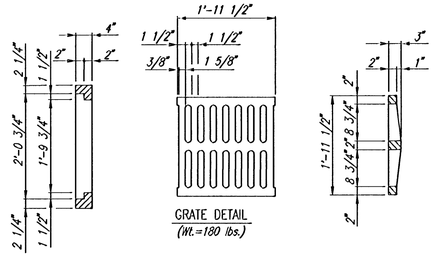

GRATE DETAIL
(Wt.=180 lbs.)

GENERAL NOTES

CONCRETE SHALL BE C.O.W. STANDARD PAVING MIX. ALL EXPOSED EDGES SHALL BE FINISHED WITH AN APPROVED EDGING TOOL.

REINFORCING STEEL SHALL BE A MINIMUM GRADE 40, A.S.T.M. A615. ALL DIMENSIONS RELATIVE TO PLACEMENT OF REINFORCING ARE TO THE CENTERLINE OF BARS UNLESS OTHERWISE NOTED.

INLET CASTINGS SHALL BE MANUFACTURED USING GOOD QUALITY GRAY IRON CONFORMING TO CLASS 30 OF A.S.T.M. DESIGNATION A-48. DIMENSIONS AND WEIGHTS SHOWN ON THE DETAILED DRAWINGS SHALL BE CONSIDERED AS MINIMUM REQUIREMENTS AND ANY DEVIATIONS FROM THE DIMENSIONS SHOWN MUST BE SPECIFICALLY APPROVED. THE FINISHED CASTINGS SHALL BE OF UNIFORM QUALITY, FREE FROM BLOWHOLES, POROSITY, HARD SPOTS, SHRINKAGE DISTORTIONS OR OTHER DEFECTS.

CONSTRUCTION REQUIREMENTS AND MATERIALS FOR MASONRY WALLS SHALL CONFORM TO THE REQUIREMENTS OF THE STANDARD SPECIFICATIONS.

INLET FLOOR SHALL BE SHAPED WITH UNREINFORCED CONCRETE (8 SACK SAND MIX) TO CREATE FLOW CHANNELS AND TO INCREASE HYDRAULIC EFFICIENCY SUCH THAT THE INLET WILL BE SELF CLEANING BETWEEN ALL INLET AND/OR OUTLET PIPES.

AREA INLETS SHALL BE MEASURED AND PAID FOR AT THE CONTRACT UNIT PRICE BID PER EACH. THIS SHALL BE CONSIDERED FULL COMPENSATION FOR ALL EXCAVATION, BACKFILLING, MATERIALS, LABOR, CONNECTION TO EXISTING STRUCTURES (IF REQUIRED), EQUIPMENT, TOOLS, AND INCIDENTALS NECESSARY TO COMPLETE THE WORK.

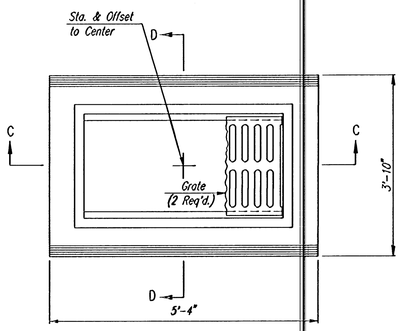

PLAN

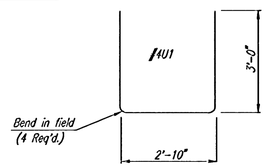

BENDING DIAGRAM

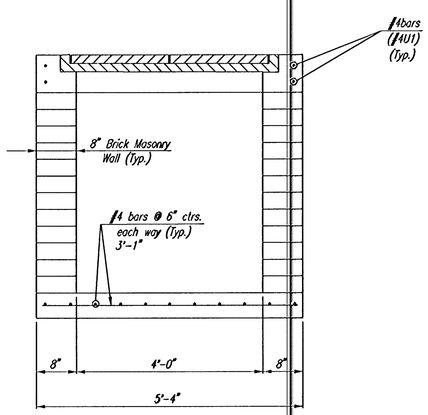

SECTION C-C

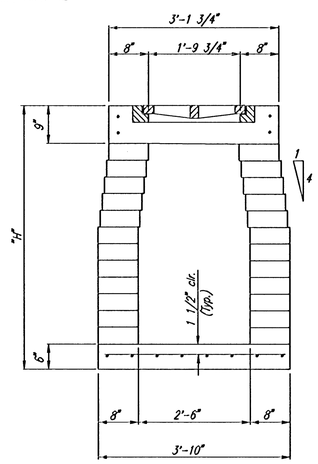

SECTION D-D

AREA INLET

BALTHROP 4TH ADDITION

STD. AREA INLET DETAILS

Professional Engineering Consultants, P.A.
303 S. TOPEKA • WICHITA, KANSAS 67202
316-262-2691 • FAX 316-262-3003

Designed by	BER	Checked by	
Drawn by	DEP	Date FEB. 2002	Job No. 01545

DSNR: DEP OPER: SAD SCALE: 1=1.00
Q:\2001\01545\000\INLET01.2 03-13-2002 03:55:58 pm