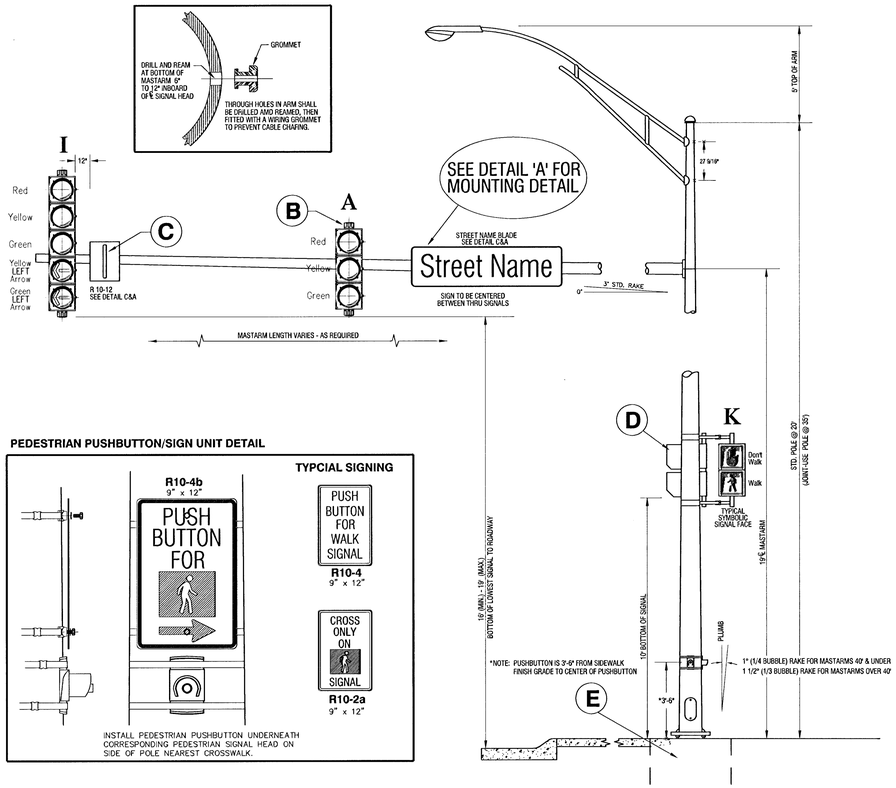

PEDESTRIAN PUSHBUTTON/SIGN UNIT DETAIL

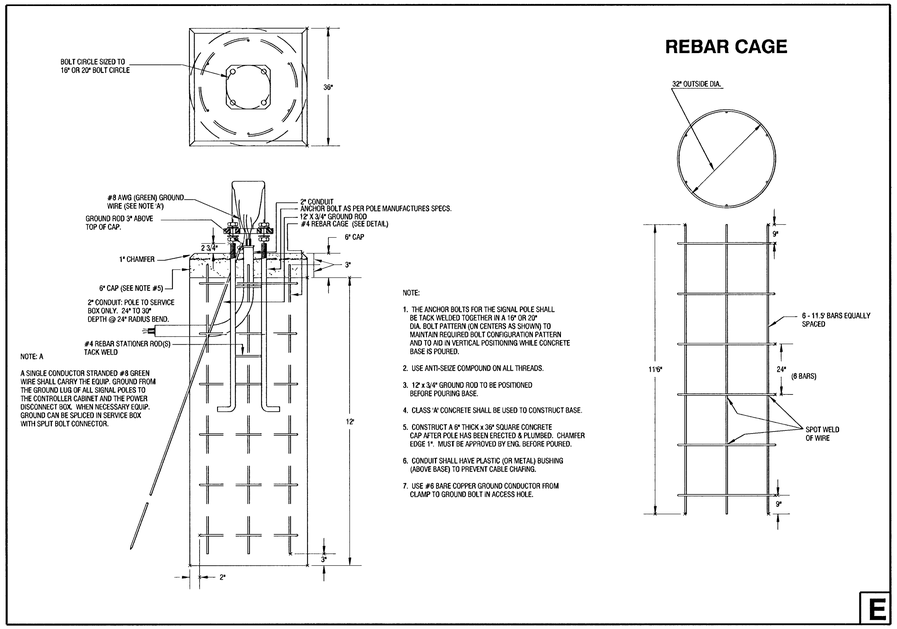

REBAR CAGE

E

STANDARD SIGNING

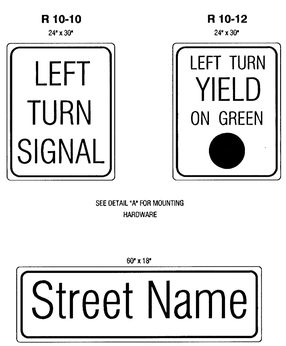

C

TYPE III SIDE-OF-POLE MOUNTING BRACKET ASSEMBLY

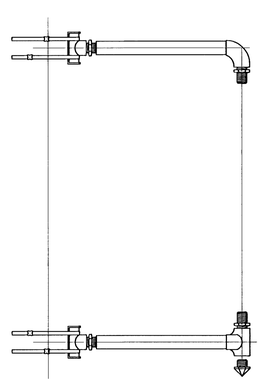

F

BANDED SIGN MOUNTING BRACKET DETAIL

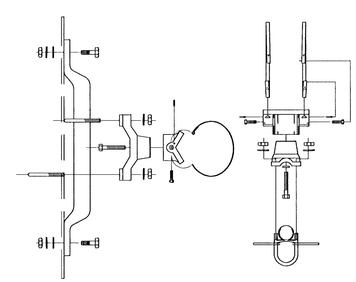

A

TYPE I SIGNAL MOUNTING BRACKET ASSEMBLY DETAIL

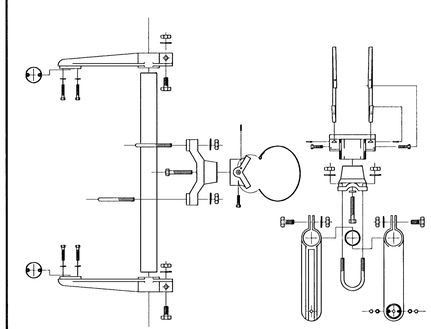

B

TYPE II SIGNAL MOUNTING BRACKET ASSEMBLY (SIDE-OF-POLE)

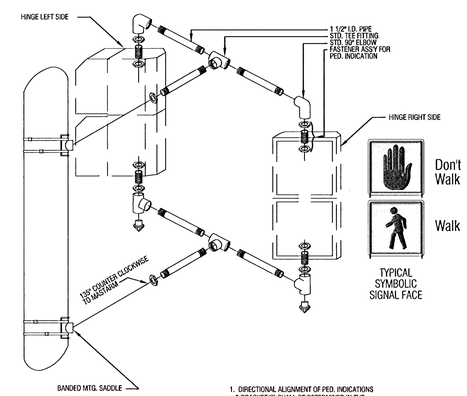

1. DIRECTIONAL ALIGNMENT OF PED. INDICATIONS & BRACKET(S) SHALL BE DETERMINED IN THE FIELD BY THE ENGINEER.
2. THROUGH HOLES IN THE POLE SHALL BE DRILLED AND WELL REAMED TO PREVENT CABLE CHAFING.
3. HINGE PEDESTRIAN SIGNAL DOORS AWAY FROM POLE.

D

PROJECT NUMBER			SHEET NAME	ENGINEERING DIRECTORY	
472-83370			SSP-DTL	F:\\kelog_gr\traffic	
DESIGN	DRAWN	APPROVED	DATE	SCALE	BAUGHMAN NO
SONNY	STAFF		MAY 2000	NONE	01-06-E045

STEEL SIGNAL POLE ASSEMBLY DETAILS
One Kellogg Place 2nd Addition

BAUGHMAN COMPANY, P.A.
ENGINEERING, SURVEYING, & PLANNING
316-262-7271 * 315 ELLIS * WICHITA, KANSAS 67211

SHEET 21 OF 43

F:\Eng\KELOG_GR\greenwich\traffic\Ssp-dt1.dwg Mon Jul 16 21:36:21 2001