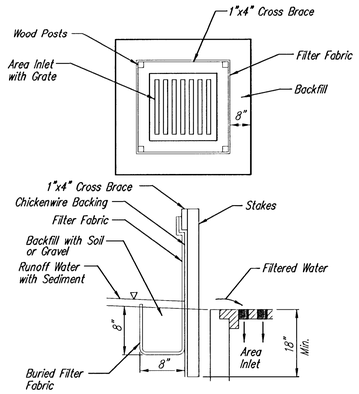

SILT FENCE BARRIERS FOR AREA INLETS
(INLET PROTECTION)

Material Specification:

Silt fence fabric should conform to the AASHTO M288 96 silt fence specification.
The wire or polymeric mesh backing used to help support the silt fence fabric should conform to the AASHTO M288 96 silt fence specification.
The posts used to support the silt fence fabric should be a hardwood material with the following minimum dimensions: 2" square (nominal) by 4' long.
The material used to frame the tops of the posts should be 1" by 4" boards.
Silt fence fabric and support backing should be attached to the wooden posts and frame with staples, wire, zip ties, or nails.

Placement:

Place a silt fence drop inlet barrier in a location where it is unlikely to be overtopped.
Water should flow through silt fence, not over it. Silt fence barriers for area inlets often fail when repeatedly overtopped.
When used as a barrierfor area inlets, silt fence fabric and posts must be supported at the top by a wooden frame.
When a silt fence barrier for area inlets is located near an inlet that has steep approach slopes, the storage capacity behind the barrier is drastically reduced. Timely removal of sediment must occur for a barrier to operate properly in this location.

Proper installation method:

Excavate a trench around the perimeter of the area inlet that is at least 8" deep by 8" wide.
Drive posts to a depth of at least 18" around the perimeter of the area inlet.
The distance between posts should be 4' or less. If the distance between two adjacent corner posts is more than 4', add another post(s) between them.
Connect the tops of all the posts with a wooden frame made of 1" by 4" boards. Use nails or screws for fastening.
Attach the wire or polymeric-mesh backing to the outside of the post/frame structure with staples, wire, zip ties, or nails.
Roll out a continuous length of silt fence fabric long enough to wrap around the perimeter of the area inlet. Add more length for overlapping the fabric joint. Place the edge of the fabric in the trench, starting at the outside edge of the trench. Line all three sides of the trench with the fabric. Backfill over the fabric in the trench with the excavated soil and compact. After filling the trench, approximately 24" to 36" of silt fence fabric should remain exposed.
Attach the silt fence to the outside of the post/frame structure with staples, wire, zip ties, or nails. The joint should be overlapped to the next post.

Note: When a silt fence barrier for area inlet is placed in a shallow median ditch, make sure that the top of the barrier is not higher than the paved road. In this configuration, water may spread onto the roadway causing a hazardous condition.

List of common placement/installation mistakes to avoid:

Water should flow through a silt fence barrier for area inlet-not over it. Place a silt fence barrier for area inlet in a location where it is unlikely to be overtopped. Silt fence barrier for area inlets often fail when repeatedly overtopped.
Do not place posts on the outside of the silt fence barrier for area inlet. In this configuration, the force of the water is not resisted by the posts, but only by the staples (wire, zip-ties, nails, etc.). The silt fence will rip and fail.
Do not install silt fence barrier for area inlets without framing the top of the posts.
The corner posts around area inlets are stressed in two directions whereas a normal silt fence is only stressed in one direction. This added stress requires more support.

Inspection and Maintenance:

Silt fence barrier for area inlets should be inspected every 7 days and within 24 hours of a rainfall of 1/2" or more. The following is a list of questions that should be addressed during each inspection:

Does water flow under the silt fence?
Does the silt fence sag excessively?
Has the silt fence torn or become detached from the posts?
Does sediment need to be removed from behind the area inlet barrier?

NOTE: Point A must be higher than Point B so that water flows over the bales and not around them.

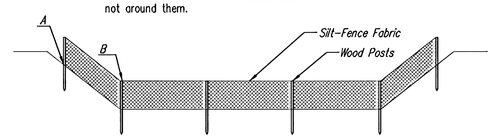

ELEVATION

SILT FENCE DITCH CHECKS
(STREAM PROTECTION)

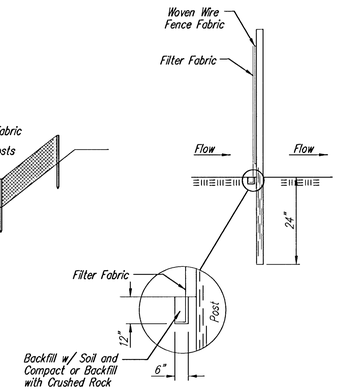

ANCHOR TRENCH DETAIL

Material Specification:

Silt fence fabric should conform to the AASHTO M288 96 silt fence specification.
The posts used to support the silt fence fabric should be a hardwood material with the following minimum dimensions: 2" square (nominal) by 4' long.
Silt fence fabric should be attached to the wooden posts with staples, wire, zip ties, or nails.

Placement:

Place silt fence in ditches where it is unlikely that it will be overtopped.
Water should flow through a silt fence ditch check, not over it. Silt fence ditch checks often fail when overtopped.
Silt fence ditch checks should be placed perpendicular to the flowline of the ditch.
The silt fence should extend far enough so that the ground level at the ends of the fence is higher than the top of the low point of the fence. This prevents water from flowing around the check.
Checks should not be placed in ditches where high flows are expected. Rock checks should be used instead.
Silt fence should be placed in ditches with slopes of 6% or less. For slopes steeper than 6%, rock checks should be used.

The following table provides check spacing for a given ditch grade:

Ditch Check Ditch grade (%)	Spacing Check Spacing (feet)
0.5	200
1.0	200
2.0	100
3.0	65
4.0	50
5.0	40
6.0	30

Proper installation method:

Excavate a trench perpendicular to the ditch flowline that is at least 12" deep by 6" wide.
Extend the trench in a straight line along the entire length of the proposed ditch check.
Place the soil on the upstream side of the trench for later use.
Roll out a continuous length of silt fence fabric on the downstream side of the trench.
Place the edge of the fabric in the trench starting at the top upstream edge of the trench. Line two sides of the trench with the fabric as shown on detail. Backfill over the fabric in the trench with the excavated soil and compact. After filling the trench, approximately 24" to 36" of silt fence fabric should remain exposed.
Lay the exposed silt fence on the upstream side of the trench to clear an area for driving in the posts. Just downstream of the trench, drive posts into the ground to a depth of at least 24". Place posts no more than 4' apart.
Attach the silt fence to the anchored post with staples, wire, zip ties, or nails.

List of common placement/installation mistakes to avoid:

Water should flow through a silt fence ditch check-not over it. Place silt fence in ditches where it is unlikely that it will be overtopped. Silt fence installations quickly deteriorate when water overtops them.
Do not place silt fence posts on the upstream side of the silt fence fabric. In this configuration, the force of the water is not restricted by the posts, but only by the staples (wire, zip ties, nails, etc.). The silt fence will rip and fail.
Do not place a silt fence ditch check directly in front of a culvert outlet. It will not stand up to the concentrated flow.
Do not place silt fence ditch checks in ditches that will likely experience high flows. They will not stand up to concentrated flow.
Follow prescribed ditch check spacing guidelines. If spacing guidelines are exceeded, erosion will occur between the ditch checks.
Do not allow water to flow around the ditch check. Make sure that the ditch check is long enough so that the ground level at the ends of the fence is higher than the low point on the top of the fence.
Do not place silt fence ditch checks in channels with shallow soils underlain by rock. If the check is not anchored sufficiently, it will wash out.

Inspection and Maintenance:

Silt fence ditch checks should be inspected every 7 days and within 24 hours of a rainfall of 1/2" or more. The following is a list of questions that should be addressed during each inspection:

Does water flow around the ditch check?
Does water flow under the ditch check?
Does the silt fence sag excessively?
Has the silt fence torn or become detached from the posts?
Does sediment need to be removed from behind the ditch check?

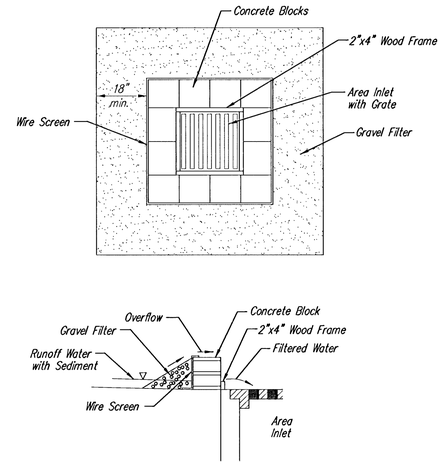

CONCRETE BLOCK FILTER FOR AREA DRAIN
(INLET PROTECTION)

Gravel barriers provide little filtering of large inflow waters. However, when installed correctly and maintained, they can effectively treat low runoff flows.

Placement of gravel filters around area drains must be completed in a manner that will not cause local flooding.

Gravel filters can be used if the immediate and adjacent area to the area drain consists of soil or pavement.

Only gravel filters are to be installed on top of the pavement.

Instructions for Installing:

STEP 1: Place concrete blocks around the grate. The blocks can be stacked one or two high and should be supported by a 2"x4" board.
STEP 2: Wrap 1/2" mesh wire screen around the concrete blocks.
STEP 3: Place 1" to 1-1/2" diameter rock around the blocks and wire screen. Be sure the rock extends down from the top of the concrete block.
STEP 4: To prevent damage to vehicles, signs warning drivers about the structures may be necessary.

An alternative method is use of gravel bags that are supported to prevent collapsing.

Use of rock having diameters smaller than 1" may result in clogging of pores and reduce the amount of water flowing into an inlet.

Maintenance:

All gravel filters installed around area drains should be inspected and repaired after each runoff event. Sediment should be removed when material is within 3" of the top of any block. Periodically, the gravel should be raked to increase infiltration and filtering of runoff waters. Accumulated sediment is to be removed immediately from roads and streets after every runoff event.

CITY OF WICHITA

SOIL EROSION BMP DETAILS

CHRISTOPHER M. CARRIER, P.E.
STORM WATER ENGINEER

PROJECT NUMBER	OCA NO.
472-83370	765682

DATE MAY 2001

F:\Eng\KELOS_GA\greenwich\details\SEBMP_PEC_DTLS2-R14.dwg Mon Jul 16 23:46:16 2001