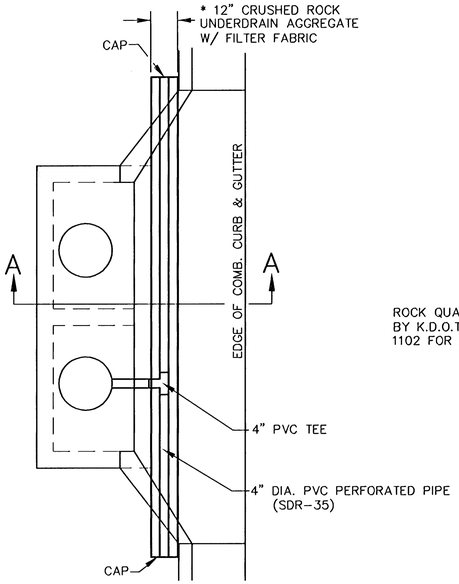

PLAN

* UNDERDRAIN AGGREGATE
PERCENT OF AGGREGATE RETAINED

1"	0
3/4"	0 to 10
3/8"	45 to 80
#4	90 to 100
#8	95 to 100

ROCK QUALITY SHALL CONFORM TO THE REQUIREMENTS SPECIFIED BY K.D.O.T. 1990 EDITION STANDARD SPECIFICATION SUBSECTION 1102 FOR DURABILITY CLASS 1.

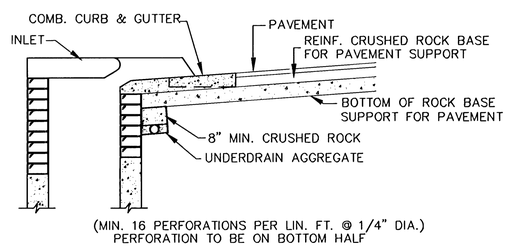

SECTION A–A

NOTE: PLACE 4" PVC PERFORATED PIPE AT ALL DRAINAGE SUMP LOCATIONS.
COST OF UNDERDRAIN SYSTEM TO BE INCIDENTAL TO THE REINFORCED CRUSHED ROCK SUBGRADE.
INLET TYPE MAY VARY FROM THAT SHOWN.

PAVEMENT UNDERDRAIN DETAIL

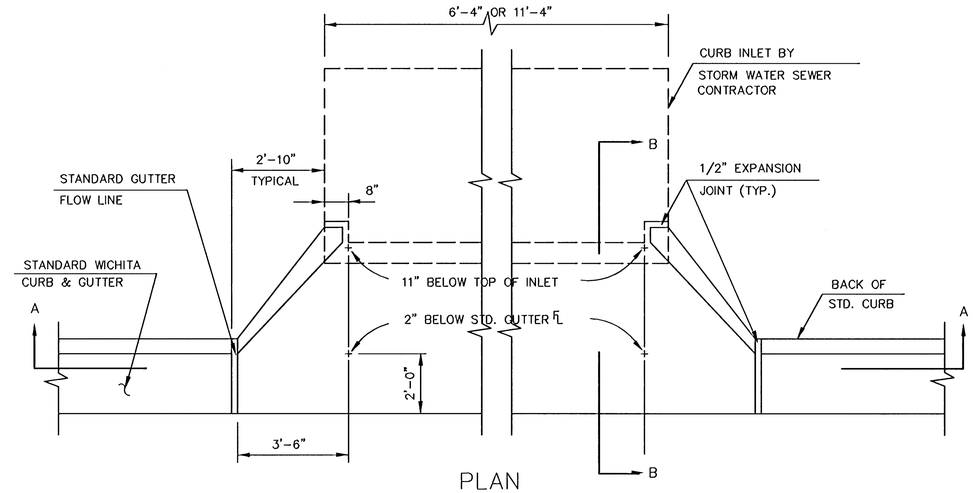

PLAN

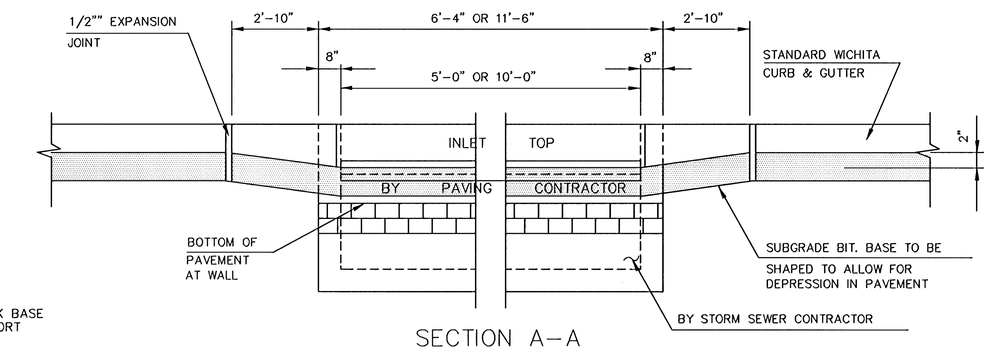

SECTION A–A

GENERAL NOTES

1. USE THE CONCRETE MIX SPECIFIED FOR CITY OF WICHITA CONCRETE PAVEMENT. ALL EXPOSED EDGES SHALL BE FINISHED WITH AN EDGING TOOL.
2. TYPE 1A INLET HOOKUP WILL BE PAID EACH REGARDLESS OF SIZE.
3. ADDITIONAL CURB & GUTTER CONSTRUCTION NECESSARY TO CONNECT SET BACK INLET TO PAVEMENT WILL BE PAID FOR AT THE UNIT PRICE BID FOR EACH INLET

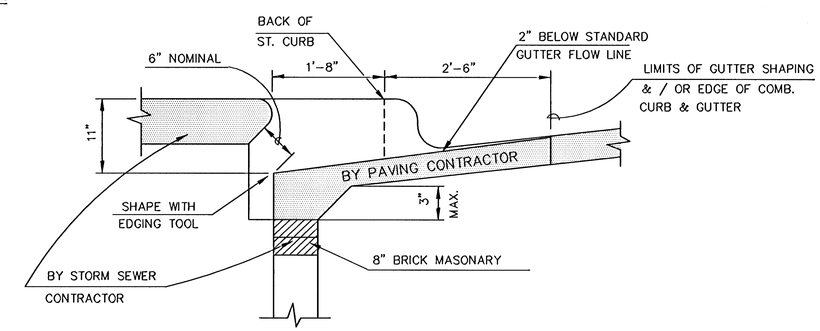

SECTION B–B

TYPE 1A INLET HOOKUP

(BY PAVING CONTRACTOR)

MKEC ENGINEERING CONSULTANTS, INC.
411 N. WEBB ROAD
WICHITA, KS. 67206
316 - 684 - 9600

PAVING PLANS
COUNTRY HOLLOW
GILBERT PHASE 1

INLET DETAILS
SHEET TITLE

472-84350
PROJECT NUMBER

DFL
DESIGN BY

MKEC
DRAWN BY

GJA
CHECKED BY

ISSUED
MARCH 2006

REVISED

SHEET NO.
6 of 19

MKEC ENGINEERING CONSULTANTS, INC.