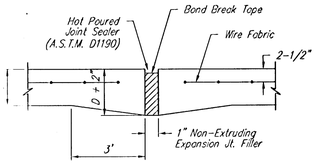

EXPANSION JOINT

NOTE: Extra Thickness to be Subsidiary to Price of Square Yards Pavement

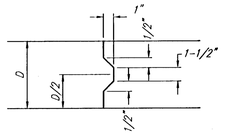

KEYWAY DETAIL

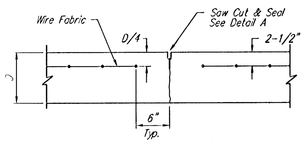

CONTRACTION JOINT DETAIL (C.J.)

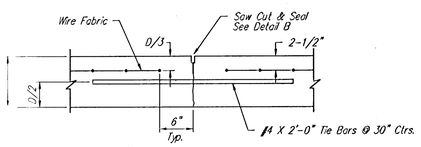

LONGITUDINAL JOINT DETAIL (L.J.)

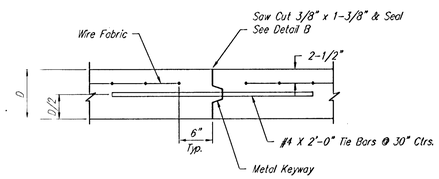

OPTIONAL LONGITUDINAL JOINT DETAIL (L.J.)
(CONSTRUCTION JOINT)

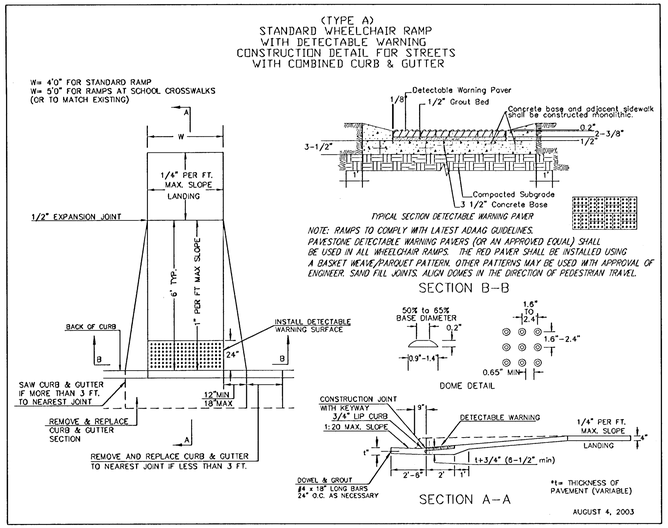

WHEELCHAIR RAMP DETAIL

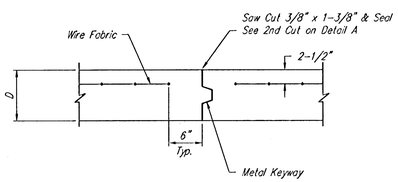

OPTIONAL CONTRACTION JOINT
(CONSTRUCTION JOINT)

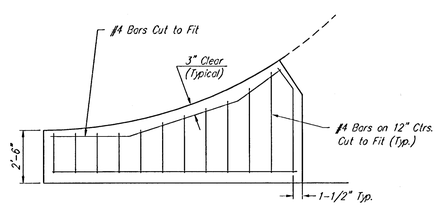

WING REINFORCING DETAIL

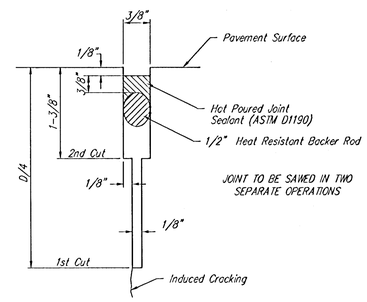

SAW JOINT DETAIL "A"

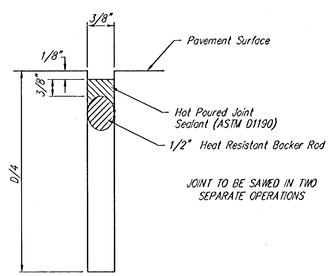

SAW JOINT DETAIL "B"

NOTE: 6" X 12" W4XW4 Wire Fabric Reinforcing Shall Be Placed So That The Wires With The 6" Spacing Will Run Parallel With The Longitudinal Joints.

Scale: 1" = 10' Horizontal

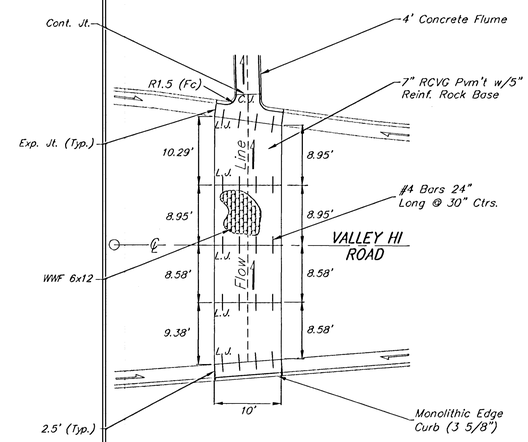

Baughman

Auburn Hills 16th Addition

Valley Gutter Detail

Storm Water Drain Improvements

Baughman Company, P.A. 315 Ellis St. Wichita, KS 67211 P 316.262.7271 F 316.262.0149
ENGINEERING | SURVEYING | PLANNING | LANDSCAPE ARCHITECTURE

PROJECT NUMBER 468-84092	DESIGN AEO / DRAWN RDM
REVISIONS:	APPROVED / DATE 03/08/2006
	SCALE Noted
	SHEET 25 OF 47

E:\Auburn Hills 16th\SWD\VO_DETAIL.dwg