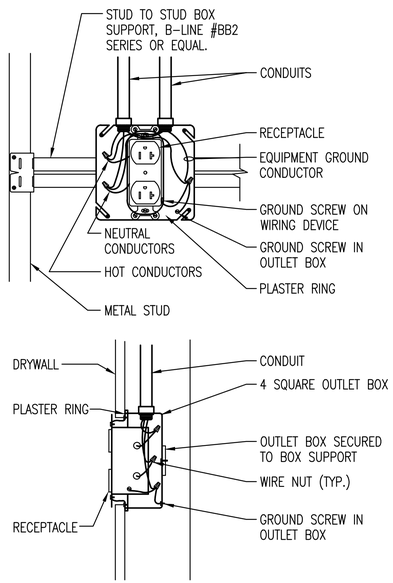

1 TYPICAL RECEPTACLE MOUNTING DETAIL

NO SCALE

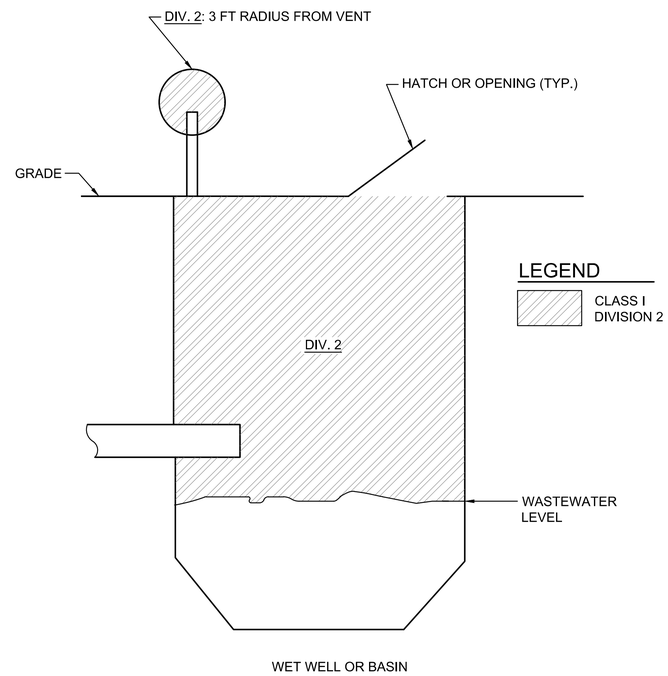

2 TYPICAL AREA CLASSIFICATION – LIFT STATION

NO SCALE

NOTE: NFPA 820 SEC 4.2

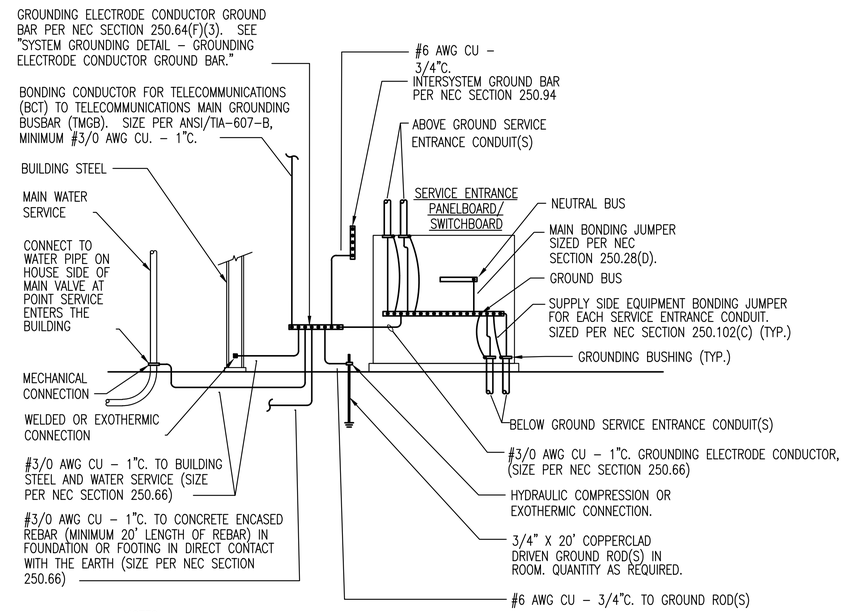

NOTES:

1. PROVIDE OTHER GROUNDING CONNECTIONS AS SPECIFIED IN NEC SECTION 250.50.
2. LABEL EACH GROUNDING ELECTRODE CONDUCTOR AND BONDING JUMPER.
3. WHERE CONDUCTORS ARE ROUTED IN FERROUS CONDUIT, BOND BOTH ENDS OF THE CONDUIT TO THE CONDUCTOR.

3 SYSTEM GROUNDING DETAIL – PANEL

NO SCALE

PEC
PROFESSIONAL ENGINEERING CONSULTANTS
400 S. KANSAS AVE. SUITE 200
TOPEKA, KS 66603
785-233-8300 www.pec1.com

CITY OF WICHITA

SEAN PATRICK GERETY
LICENSED
28753
12/14/2023
KANSAS
PROFESSIONAL ENGINEER

SANITARY SEWER IMPROVEMENTS
COWSKIN FORCE MAIN AND LIFT STATION 60 IMPROVEMENTS

PAUL GUNZELMAN, P.E. - INTERIM CITY ENGINEER
CITY OF WICHITA PROJECT NO. 468-2022-040654

Issue:

JOB NO.	35-210602-001-042
DATE	DECEMBER 2023
PM	TBK
DESIGNED BY	SPG
DRAWN BY	JAB
CHECKED BY	RWW

ELECTRICAL DETAILS

E-501

SAVED 12/14/2023 5:19:31 PM BY SEAN.GERETY
PLOTTED 12/14/2023 5:20:49 PM BY SEAN.GERETY
U:\WICHITA-CIVIL\2021\210602\002\PEC\DRAWINGS\ELEC\E-501 ELECTRICAL DETAILS.DWG