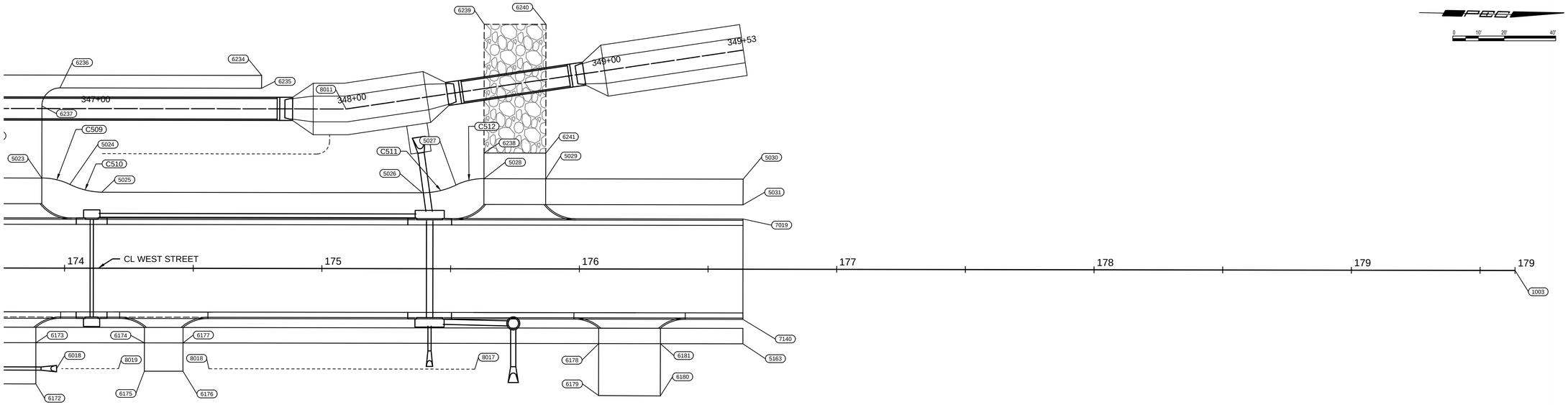

PEC
0 10' 20' 40'

PEC
PROFESSIONAL ENGINEERING CONSULTANTS
303 SOUTH TOPEKA
WICHITA, KS 67202
316-262-2691 www.pec1.com

CITY OF WICHITA

LUKE PETER
LICENSED
27413
10/11/2024
KANSAS
PROFESSIONAL ENGINEER

WEST STREET IMPROVEMENTS
FROM MACARTHUR ROAD TO
47TH ST. SOUTH

CITY OF WICHITA

Issue:		

JOB NO.	210254-001
DATE	OCTOBER 2024
PM	TPA
DESIGNED BY	LGP
DRAWN BY	CP
CHECKED BY	KMS

COORDINATE GEOMETRY
PLAN (6)

CP306
40 OF 206

SAVED 10/8/2024 1:08:56 PM BY LUKE.PETER
PLOTTED 10/10/2024 1:35:54 PM BY LUKE PETER
U:\WICHITA-CIVIL\2021\210254\001\PEC\DRAWINGS\XX-210254-001-CP301-COGO PLAN.DWG