HARDWARE

PRODUCT TO BE B6WBPLAYERINNVPERFS-POLY WITH IN-GROUND MOUNT, EXACT SPECIFICATIONS TO BE PROVIDED BY SUPPLIER.

5/16" x 1"
Machine Bolt

5/16" Washer

5/16" Kep Nut

SUPERIOR RECREATIONAL PRODUCTS
A PLAYCORE Company

PRODUCT SPECIFICATIONS

~~B6WBPLAYERINNVSM / B6WBPLAYERULPERFSM~~
~~DELUXE PORTABLE BENCH WITH BACK~~

Seats & Back: 11 gauge die formed angle frame 1"x1-7/8" with 3" radius corners. Seat and back plates are fabricated from a 12ga plate. Holes are precision punched at 5/8" diameter. 7 gauge x 1-1/2" flat bar center support and mounting bracket understructure. Electrically MIG welded.

Coating: Oven fused functionalized polyethylene copolymer-based thermoplastic. Fluidized bed coating application with superior mechanical performance, impact resistance and UV-stability.

Frame: 2-3/8" O.D. x 12 gauge pre-galvanized structural steel tubing. Seat/back support is bent over a mandrel through the bend radius producing a wrinkle free bend. Tube ends are pre-galvanized steel capped. Seat mounting points are 7 gauge x 1-1/2" die stamped steel flat bar. The surface mount plate has four holes for stable mounting, and clipped corners for a more finished look. All electrically MIG welded.

Frame Coating: Electrostatic powder coated application oven cured.

Hardware: All stainless steel hardware fasteners.

Dimensions: 6' bench ~~surface mount~~ with back. Seats and back are 15" wide x 96" long. Seat height is 18", seat back height is 36-1/2". Total depth of seat with back is 24".

SUPERIOR RECREATIONAL PRODUCTS
A PLAYCORE Company

COMPONENTS

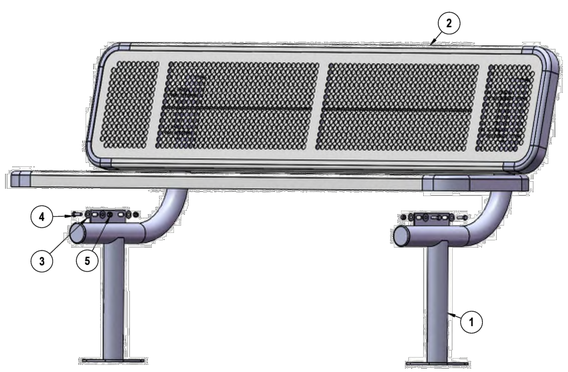

ITEM NO.	PartNo	DESCRIPTION	QTY
~~1~~	~~B-WS400M~~	~~6'10.2" Surface Mount Leg~~	~~2~~
~~2~~	~~B-BPT6-S~~	~~6' Punched Bolster Seat~~	~~2~~
~~3~~	~~30-32-0001~~	~~5/16" SS Washer~~	~~16~~
~~4~~	~~30-32-0002~~	~~5/16" x 1" Machine Bolt (SS)~~	~~8~~
~~5~~	~~30-32-0015~~	~~5/16" Kep Nut (SS)~~	~~8~~

~~Recommended Surface Mount Hardware:~~
~~3/8" x 3-1/2" Concrete Expansion Anchor Bolts~~
(Not Included)

SUPERIOR RECREATIONAL PRODUCTS
A PLAYCORE Company

OVERALL DIMENSIONS

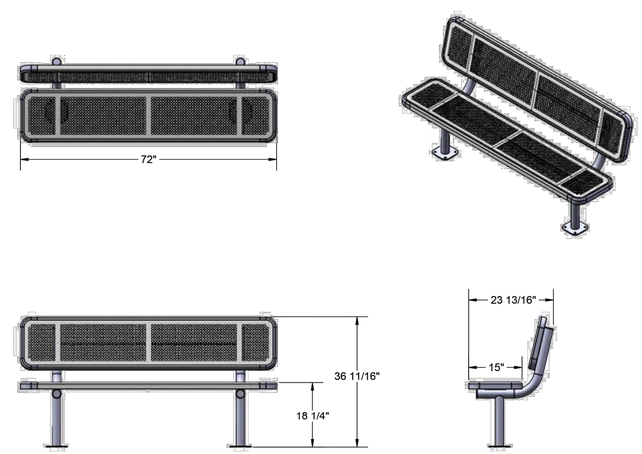

SUPERIOR RECREATIONAL PRODUCTS
A PLAYCORE Company

PEC
PROFESSIONAL ENGINEERING CONSULTANTS
303 SOUTH TOPEKA
WICHITA, KS 67202
316-262-2691 www.pec1.com

CITY OF WICHITA

CHISHOLM CREEK PARK NORTH IMPROVEMENTS

N WOODLAWN BLVD, WICHITA, KS 67220

Issue:		
1	ISSUED FOR BID	01/24/25

JOB NO.	247042-001
DATE	24 JANUARY 2025
PM	JAG
DESIGNED BY	JAG
DRAWN BY	BAB
CHECKED BY	DRC

SUPERIOR BENCH DETAIL SPECIFICATIONS.

CS510

SAVED 1/21/2025 1:33:22 PM BY BENJAMIN BOCKOVER
PLOTTED 1/24/2025 10:30:58 AM BY BENJAMIN BOCKOVER
U:\WICHITA-CIVIL\2024\247042\001\PD4_PLANS\030\247042-001-CS510.DWG